TAKEUCHI

*Those in the know, know Takeuchi*

# TL8 Compact Track Loader

TL8

TL10

TL12

TL12V2

# Product Features & Specifications

## ENGINE

- U.S. EPA Final Tier 4 Emission Compliant
- Turbocharged
- DOC+DPF Exhaust After Treatment
- Active Power Control Power Management System
- Working Modes - Power and ECO
- Automatic Fuel Bleed System
- High Capacity Radiator, Hydraulic Oil Cooler and Intercooler Mounted Side-by-Side on Swing Out Frame
- Dual Element Air Filter, with Pre-Cleaner

## ELECTRICAL

- Multi-Informational Display
- Sealed Rocker Switches
- 12 volt System with 60 amp Alternator
- Halogen Work Lights, Front and Rear
- Engine Preheat
- Hour Meter
- Back-up Alarm
- Horn

## TAKEUCHI FLEET MANAGEMENT

- 2 Year Standard Service
- Minimize Downtime
- Remote Diagnostics
- Utilization Tracking
- Proactive Maintenance
- Control Costs

## UNDERCARRIAGE AND FRAME

- Permanently Sealed Track Rollers with Metal Face Seals
- Fully Welded Frame with Integrated Cross Members
- Front and Rear Tie-Down and Lift Points
- Two-Speed Travel
- 15.7” Rubber Track with Integrated Steel Cables and Forged Steel Inserts
- 12.6” Rubber Track with Integrated Steel Cables and Forged Steel Inserts (optional)

## OPERATOR’S STATION

- Tilt-up Operator’s Station
- Deluxe High Back Adjustable Suspension Seat
- Rear Pivoting Seat Bar with Integrated Arm Rest
- ROPS / FOPS Structure
- FOPS Level 2 Guard (High Flow Only)
- Retractable 2” Seat Belt
- Retractable 3” Seat Belt (optional)
- 3 Point Retractable Seat Belt (optional)
- Pressurized Cab with Roll-up Door, A/C, Heat, Defrost and Front Wiper (optional)
- AM/FM/MP3 Radio with NOAA Weatherband (optional)
- Polycarbonate Door and Top Guard (High Flow Only)

## HYDRAULIC & WORKING EQUIPMENT

- Cushioned Boom Cylinders
- Boom Float with Detent
- Hydraulic Pilot Controls
- Proportional Auxiliary Controls with Detent
- Pressure Relieving Flat Faced Coupler Body
- 14-Pin Connector with Push Button Control
- Hydraulic Self Leveling
- Mechanical Quick Coupler
- Hydraulic Quick Coupler
  Cab - Standard Equipment
  Canopy - optional
- High Flow Auxiliary Hydraulics 33 gpm (optional)
- Pattern Change Valve (ISO or H) (optional)

Convenient Service and Maintenance Access

Integrated Undercarriage

# TOUGH, RUGGED, EFFICIENT

Fully Welded Frame

Steel on Steel

Active Power Control

HD Cooling Module

Powerful and efficient, the TL8 is engineered to provide excellent maneuverability, performance, and value. The heavy duty cross member, two-speed travel, and hydraulic self-leveling are standard equipment on the TL8. Operator controls include a multi-function display, hydraulic pilot controls, foot throttle, and a high back suspension seat. The TL8 provides ample space and comfort for your time on the job.

The TL8 offers a heavy duty rear door that swings out providing access to the high capacity cooling module while the tilt back cab / canopy provide access to the clustered engine oil filter, primary, and secondary fuel filters, pump group, control valve, and pilot line filter. Takeuchi quality and functionality ensures the TL8 will deliver many years of trouble free service in the most extreme conditions.

Spacious operator's platform with easy to reach controls and switches.

## OPERATING PERFORMANCE

| | | |
|---|---|---|
| Operating Weight - Canopy | 8,455 lb | (3,835 kg) |
| Cab | 8,631 lb | (3,915 kg) |
| Tipping Load | 6,020 lb | (2,731 kg) |
| Rated Operating Capacity, SAE J818* | 2,105 lb | (955 kg) |
| w/ Optional Counter Weight | 2,323 lb | (1,054 kg) |
| Operating Load at 50% of Tipping Load | 3,010 lb | (1,365 kg) |
| Bucket Breakout Force | 6,856 lb | (3,110 kg) |
| Lift Arm Breakout Force | 6,709 lb | (3,100 kg) |
| Traction Force | 9,127 lb | (4,140 kg) |
| Ground Pressure - 15.7” Track | 4.4 psi | (30.2 kPa) |
| Ground Pressure - 12.6” Track | 5.4 psi | (37.2 kPa) |
| Travel speed - Low | 4.6 mph | (7.4 km/hr) |
| High | 6.8 mph | (11.0 km/hr) |

*Operating capacity of track loaders is rated according to SAE J818 at no more than 35% of the tipping load.

## HYDRAULIC SYSTEM

| | | |
|---|---|---|
| Auxiliary Flow - Primary Circuit | 18.4 gpm | (69.5 Lpm) |
| Auxiliary Flow - High Flow (optional) | 33.0 gpm | (124.9 Lpm) |
| Hydraulic System Pressure | 3,046 psi | (21.0 MPa) |

## ENGINE

| | | |
|---|---|---|
| Make / Model | Kubota / V3307-CR-Turbo | |
| Engine Displacement | 203 cu in | (3.3 L) |
| Horsepower @ 2,600 rpm | 74.3 hp | (55.4 kW) |
| Maximum Torque @ 1,500 rpm | 192 ft-lb | (260 Nm) |

## FLUID CAPACITIES

| | | |
|---|---|---|
| Engine Lubrication | 11.2 qt | (11.8 L) |
| Cooling System | 14.8 qt | (14.0 L) |
| Fuel Tank Capacity | 19.8 gal | (75.0 L) |
| Fuel Consumption (65% of Full Load) | 2.69 gal/hr | (10.2 L /hr) |
| Hydraulic Reservoir Capacity | 10.3 gal | (39.0 L) |
| Hydraulic System Capacity | 15.3 gal | (58.0 L) |

LCD Display

Pilot Operated Controls

Roll Up Door

Double Reduction Drives

## ATTACHMENTS

Takeuchi now offers attachments for all of your Takeuchi equipment.
See your authorized Takeuchi dealer for additional information and attachment options.

Grapple - Scrap

Dozer Blades

Pallet Forks

Trenchers

# TL8 Compact Track Loader

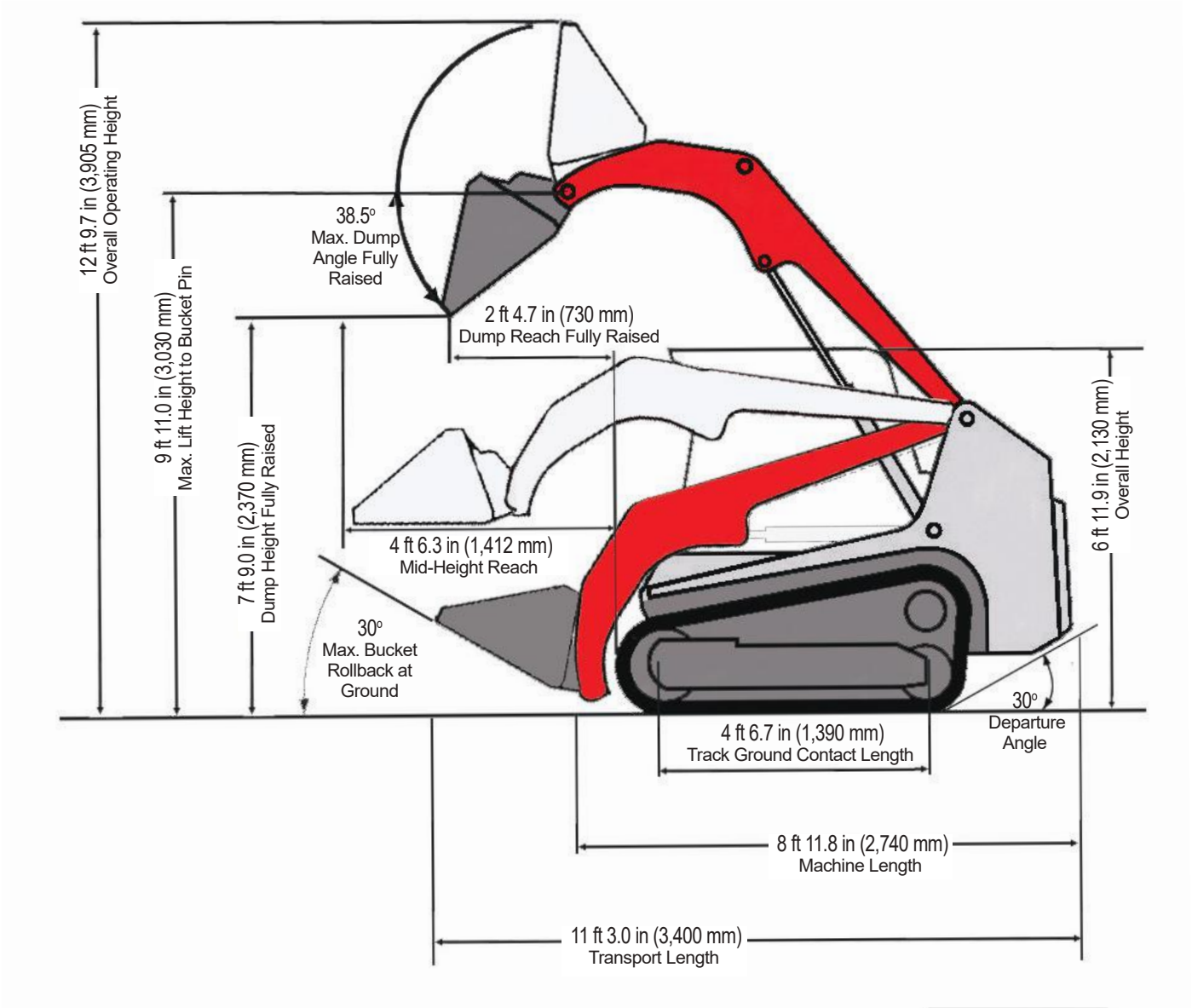


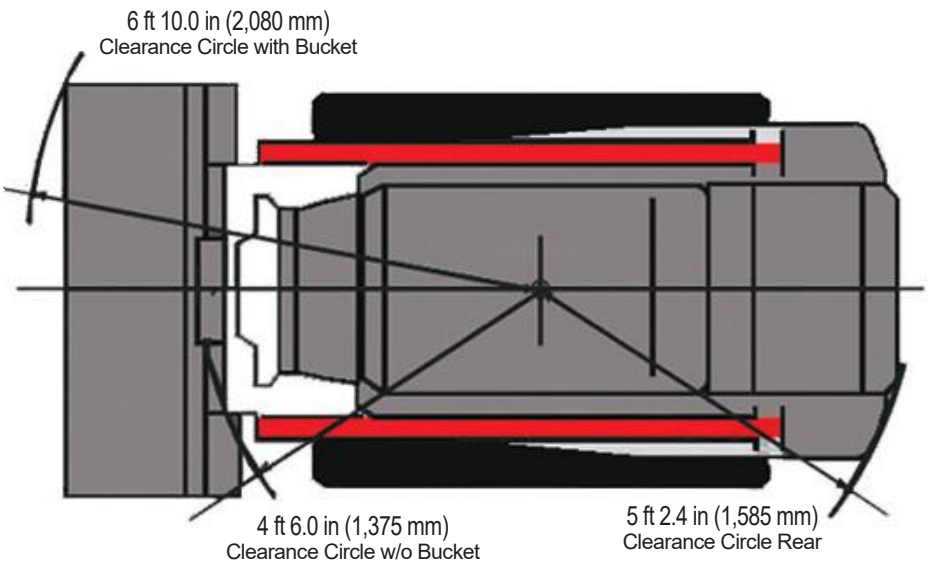


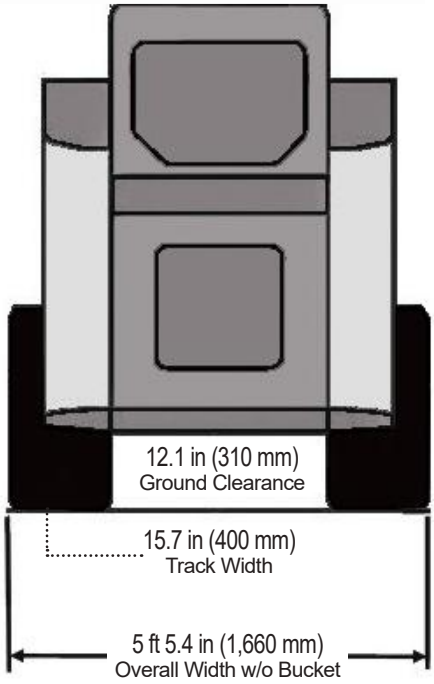

© 2016 Takeuchi Manufacturing (U.S.), Ltd. All Rights Reserved. Printed in the U.S.A.
In accordance with our established policy of continued improvement, specifications and features are subject to change without notice. Pictures may show options other than standard equipment.

(TFM) s/n (CAB) 200803863 ~

FORM: TL8 Compact Track Loader Spec Sheet- July 2016 - (TFM) s/n (CNP) 200803984 ~

TAKEUCHI

*Those in the know, know Takeuchi*